# Cat.6 12Ports 10inches Vertical Patch Panel (FTP) / Dual Type

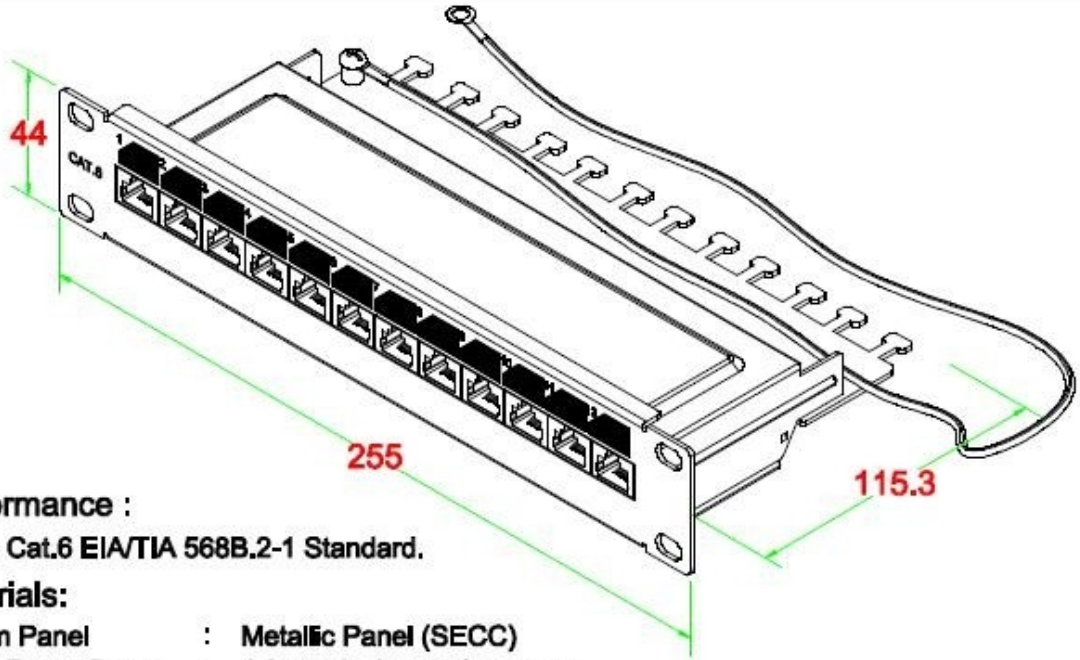


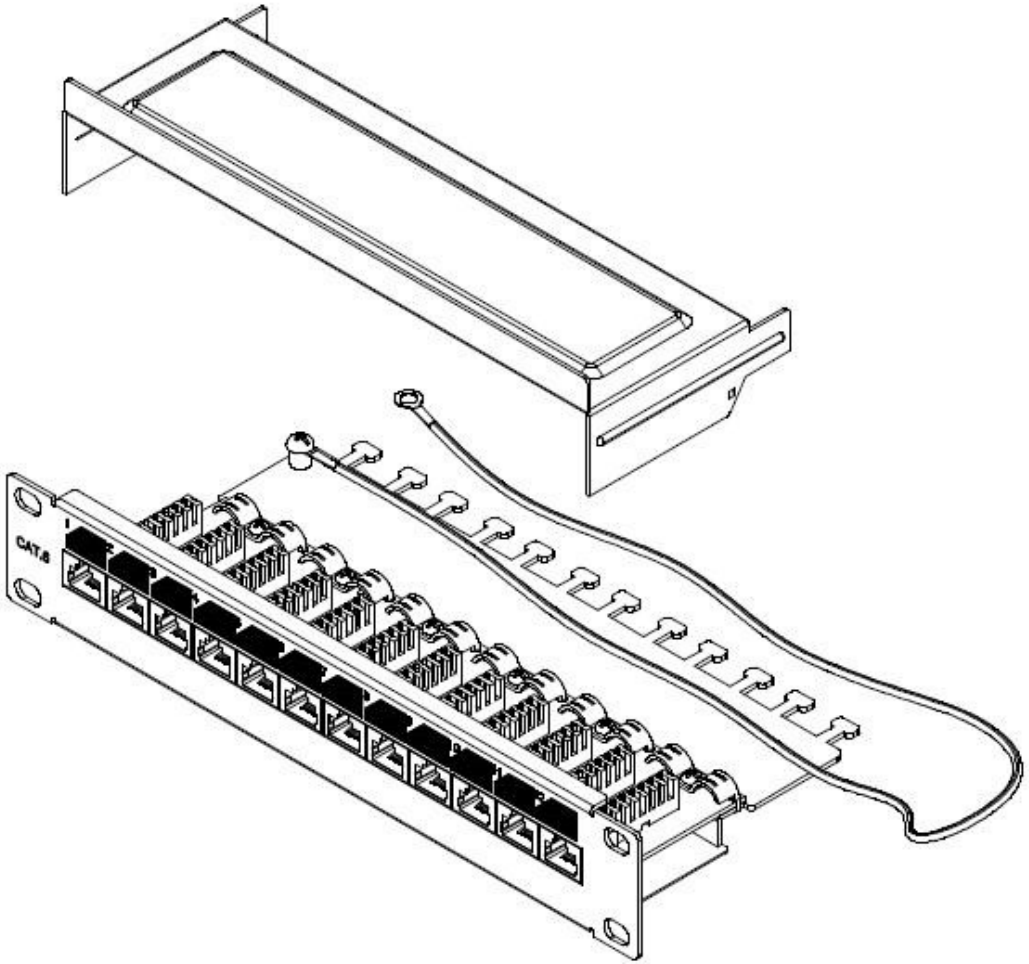


## Performance :

Meets Cat.6 EIA/TIA 568B.2-1 Standard.

## Materials:

| | | |
|---|---|---|
| Bottom Panel | : | Metallic Panel (SECC) |
| Upper Panel Cover | : | 1.2mm thickness Aluminum |
| RJ-45 Jack | : | Housing-PBT /<br>FTP 8P8C 50 micro inches gold plated / |
| PCB | : | FR-4 / 1.6mm UL-94V0 |
| IDC Body | : | Fireproof ABS UL-94V0 |
| IDC Pin | : | Bronze & Tinned |
| **Label Color Code** | : | T568 A/B |
| **IDC Description** | : | For 22-26 AWG.<br>For 110 or Krone punch-down Tool |

## Electrical Specifications :

| | | |
|---|---|---|
| Insulation Resistance | : | 500M ohms (min.) |
| Contact Resistance | : | 20m ohms (max.) |
| Current Rating | : | 1.5 Amps . |
| DC Resistance | : | 0.1 ohm (max.) |
| Withstanding Voltage | : | 1000 VAC RMS @ 60Hz / 1 min. |

## Mechanical Specifications:

| | | |
|---|---|---|
| IDC Punch Down Cycle | : | Over 25 Cycles (min.) |
| RJ-45 Jack Insertion Cycle | : | Over 2000 Cycles (min.) |
| **Operation Temperature** | : | -40 ~ +70 degree / C |

| | | | | |
|---|---|---|---|---|
| DRAW NO: | | | ITEM NO: | |
| | APPR | | CUSTOMER: | |
| UNIT: m/m | CHECK | | DATE: | |
| SCALE: | DESIGN | | TOLERANCE: | ▪ ± 1 ▪ X ± 0.2 ▪ XX ± 0.15 |